Aluminum Electrolytic Capacitors

Snap-in capacitors

Series/Type: **B43634**

Date: June 22, 2018

© EPCOS AG 2018. Reproduction, publication and dissemination of this publication, enclosures hereto and the information contained therein without EPCOS' prior express consent is prohibited.

EPCOS AG is a TDK Group Company.

Long-life grade capacitors
长寿命电容器

Applications
应用

- Frequency converters
  变频器
- Uninterruptible power supplies
  不间断电源
- Switch mode power supplies in industrial and entertainment electronics
  工业和消费电子产品中的开关电源
- Medical appliances
  医疗设备

Features
特点

- Long useful life, ultra compact
  长寿命，超紧凑型
- High reliability
  高可靠性
- High ripple current capability
  耐纹波电流能力高
- RoHS-compatible
  符合RoHS要求

Construction
结构

- Fully insulated with PVC, and PET also available
  PVC或PET套管和底垫绝缘
- Overload protection by safety vent on the base
  底部安全阀过载保护

Specifications and characteristics in brief
规格性能参数一览表

Rated voltage V_R 额定电压V_R	200 … 450 V DC	
Surge voltage V_S 浪涌电压V_S	1.15 · V_R (for $V_R \leqslant$ 250 V DC) 1.10 · V_R (for $V_R \geqslant$ 400 V DC)	
Operating temperature range 工作温度范围	-40 ºC…+85 ºC (for $V_R \leqslant$ 250 V DC) -40 ºC…+85 ºC (for $V_R \geqslant$ 400 V DC)	
Rated capacitance C_R 额定电容量C_R (20 ºC, 120 Hz)	82 … 2700 µF	
Capacitance tolerance 电容量公差	±20% (M)	
Dissipation factor (max.) 损耗正切角(最大值) 20 ºC, 120 Hz.	$V_R \leqslant$ 250 V DC: tan δ ⩽ 0.15 $V_R \geqslant$ 400 V DC: tan δ ⩽ 0.20	
Leakage current I_{leak} (20 ºC, after 5 minutes) 漏电流 I_{leak} (20 ºC, 5分钟后)	$I_{leak} \leq 0.3\ \mu A \cdot \left(\frac{C_R}{\mu F} \cdot \frac{V_R}{V}\right)^{0.7} + 4\ \mu A$	
Useful life 使用寿命 (85 ºC, V_R, $I_{AC,R}$)	8000 h	Requirements 要求: △C/C ⩽ ±20% of initial value 初始值的±20% tan δ ≤ 2 times initial specified limit 2倍初始规定值 I_{leak} ≤ initial specified limit 初始规定值
Temperature & frequency multiplier for rated ripple current 额定纹波电流温度/频率系数	Specific part number's Temperature and Frequency multipliers are available in our on-line AlCap Useful Life Calculation Tool, which please click the hyperlink as below: 个别料号纹波电流的温度和频率系数可从我们网络寿命工具获取，链接如下： https://www.epcos-china.com/epcos-zh/524040/design-support/design-tools/aluminum-electrolytic-capacitors/alcap-useful-life-calculation-tool	
Sectional specification 分规范	IEC 60384-4	

*In general, each specified part number has individual Frequency and temperature multipliers. Please refer to the AlCap Useful Life Calculation Tool, available from EPCOS web page (Design Support > Design Tools > Aluminum Electrolytic Capacitors > AlCap Useful Life Calculation Tool).
*每个电容器都有各自的额定纹波电流的频率和温度系数，具体计算请使用在EPCOS官网上的铝电解电容寿命计算工具。

Snap-in capacitors　焊片式电容器 **B43634**

Long useful life, ultra compact - 85 ºC　长寿命,超紧凑型 - 85 ºC

Dimensional drawings 尺寸图

Snap-in capacitors with standard insulation (PVC or PET)
标准PVC或PET绝缘焊片电容器

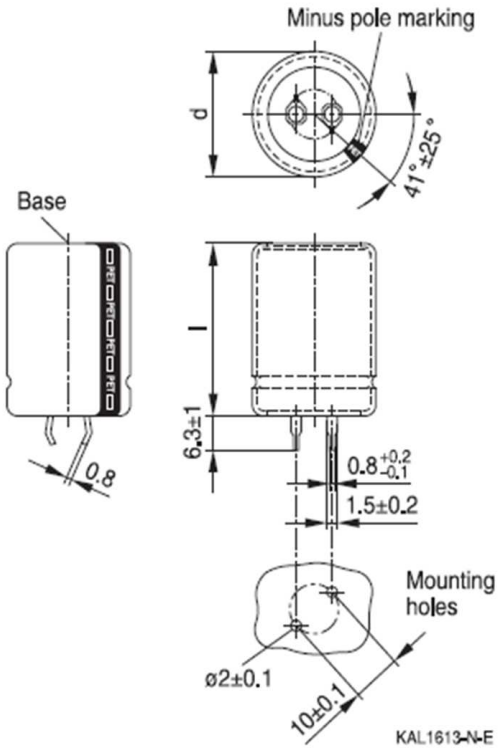

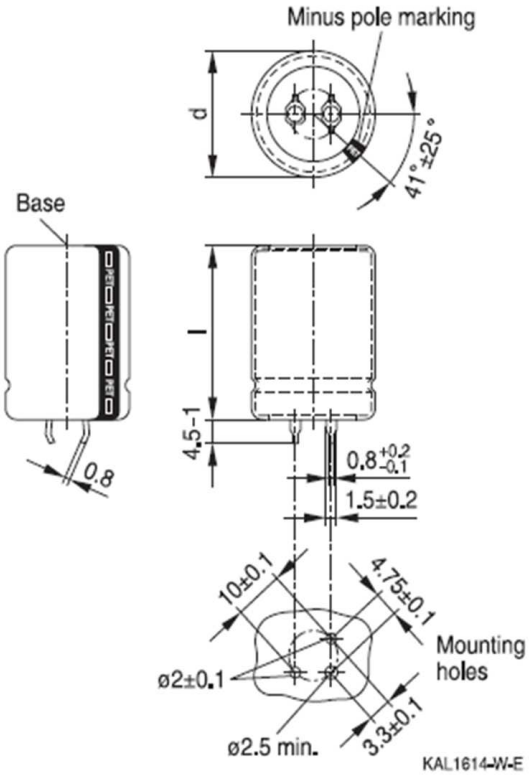

Snap-in terminals, length (6.3 ±1) mm.
Also available in a shorter version with a length of (4.5-1) mm.
Safety vent on the base.
长焊针(6.3 ±1) mm，短焊针(4.5-1) mm
防爆阀在底部

Snap-in capacitors are also available with 3 terminals length (4.5-1) mm.
Safety vent on the base.
3焊针电容器，焊针长度(4.5-1) mm
防爆阀在底部

Technical data and ordering codes 技术参数与订货编码

V_R V DC	C_R 120 Hz 20 ºC µF	Case dimensions d × l mm	ESR_{typ} 120 Hz 20 °C mΩ	$I_{AC,R}$ 120 Hz 85 ºC A	Ordering code
200	330	22 × 25	260	1.61	B43634A2337M0*#
200	390	22 × 30	220	1.84	B43634A2397M0*#
200	470	22 × 30	190	2.05	B43634A2477M0*#
200	470	25.4 × 25	200	1.94	B43634B2477M0*#
200	560	22 × 35	160	2.35	B43634A2567M0*#
200	560	25.4 × 30	160	2.24	B43634B2567M0*#
200	680	22 × 40	130	2.73	B43634A2687M0*#
200	680	25.4 × 35	130	2.59	B43634B2687M0*#
200	680	30 × 25	150	2.26	B43634C2687M0*#
200	820	22 × 45	110	3.14	B43634A2827M0*#
200	820	25.4 × 35	110	2.85	B43634B2827M0*#
200	820	30 × 30	120	2.65	B43634C2827M0*#
200	1000	25.4 × 45	90	3.43	B43634A2108M0*#
200	1000	30 × 30	110	2.82	B43634B2108M0*#
200	1000	35 × 25	130	2.47	B43634C2108M0*#
200	1200	25.4 × 50	75	3.91	B43634A2128M0*#
200	1200	30 × 35	90	3.25	B43634B2128M0*#
200	1200	35 × 30	100	3.13	B43634C2128M0*#
200	1500	30 × 40	75	4.01	B43634A2158M0*#
200	1500	35 × 35	80	3.63	B43634B2158M0*#
200	1800	30 × 50	60	4.81	B43634A2188M0*#
200	1800	35 × 40	70	4.12	B43634B2188M0*#
200	2200	30 × 55	50	5.43	B43634A2228M0*#
200	2200	35 × 45	60	4.64	B43634B2228M0*#
200	2700	35 × 50	50	5.20	B43634A2278M0*#

Composition of ordering code
订货编码规则

* = Insulation feature 绝缘特征
  0 = PVC insulation PVC绝缘
  6 = PET insulation PET绝缘

# = Terminal style 焊针类型
  0 = Standard terminals (6.3 mm) 标准焊针 6.3 mm
  2 = 3 terminals (4.5 mm) 3焊针 4.5 mm
  7 = Short terminals (4.5 mm) 短焊针 4.5 mm

Technical data and ordering codes 技术参数与订货编码

V_R V DC	C_R 120 Hz 20 ºC µF	Case dimensions d × l mm	ESR_{typ} 120 Hz 20 °C mΩ	$I_{AC,R}$ 120 Hz 85 ºC A	Ordering code
250	270	22 × 25	270	1.52	B43634E2277M0*#
250	330	22 × 30	220	1.76	B43634E2337M0*#
250	330	25.4 × 25	230	1.70	B43634F2337M0*#
250	390	22 × 35	190	2.01	B43634E2397M0*#
250	390	25.4 × 30	190	1.95	B43634F2397M0*#
250	470	22 × 40	150	2.31	B43634E2477M0*#
250	470	25.4 × 30	160	2.15	B43634F2477M0*#
250	560	22 × 40	130	2.59	B43634E2567M0*#
250	560	25.4 × 35	140	2.47	B43634F2567M0*#
250	560	30 × 25	160	2.17	B43634G2567M0*#
250	680	22 × 50	110	3.06	B43634E2687M0*#
250	680	25.4 × 40	110	2.84	B43634F2687M0*#
250	680	30 × 30	120	2.55	B43634G2687M0*#
250	680	35 × 25	140	2.33	B43634H2687M0*#
250	820	25.4 × 45	95	3.26	B43634E2827M0*#
250	820	30 × 35	100	2.93	B43634F2827M0*#
250	820	35 × 30	110	2.92	B43634G2827M0*#
250	1000	25.4 × 50	80	3.76	B43634E2108M0*#
250	1000	30 × 40	85	3.58	B43634F2108M0*#
250	1000	35 × 30	100	3.03	B43634G2108M0*#
250	1200	30 × 45	70	4.06	B43634E2128M0*#
250	1200	35 × 35	85	3.50	B43634F2128M0*#
250	1500	30 × 50	60	4.67	B43634E2158M0*#
250	1500	35 × 40	70	4.01	B43634F2158M0*#
250	1800	35 × 45	60	4.51	B43634E2188M0*#
250	2200	35 × 55	45	5.38	B43634E2228M0*#

Composition of ordering code
订货编码规则

* = Insulation feature 绝缘特征
  0 = PVC insulation PVC绝缘
  6 = PET insulation PET绝缘

# = Terminal style 焊针类型
  0 = Standard terminals (6.3 mm) 标准焊针 6.3 mm
  2 = 3 terminals (4.5 mm) 3焊针 4.5 mm
  7 = Short terminals (4.5 mm) 短焊针 4.5 mm

Technical data and ordering codes 技术参数与订货编码

V_R V DC	C_R 120 Hz 20 ºC µF	Case dimensions d × l mm	ESR_{typ} 120 Hz 20 °C mΩ	$I_{AC,R}$ 120 Hz 85 ºC A	Ordering code
400	100	22 × 25	1010	0.91	B43634A9107M0*#
400	120	22 × 30	850	1.04	B43634A9127M0*#
400	150	22 × 30	680	1.21	B43634A9157M0*#
400	150	25.4 × 25	690	1.19	B43634B9157M0*#
400	180	22 × 35	570	1.39	B43634A9187M0*#
400	180	25.4 × 30	570	1.36	B43634B9187M0*#
400	220	22 × 40	470	1.62	B43634A9227M0*#
400	220	25.4 × 35	470	1.58	B43634B9227M0*#
400	220	30 × 25	490	1.53	B43634C9227M0*#
400	270	22 × 45	380	1.90	B43634A9277M0*#
400	270	25.4 × 40	380	1.84	B43634B9277M0*#
400	270	30 × 30	390	1.77	B43634C9277M0*#
400	270	35 × 25	410	1.74	B43634D9277M0*#
400	330	25.4 × 45	310	2.14	B43634A9337M0*#
400	330	30 × 35	320	2.04	B43634B9337M0*#
400	330	35 × 25	350	1.88	B43634C9337M0*#
400	390	25.4 × 50	270	2.43	B43634A9397M0*#
400	390	30 × 35	280	2.24	B43634B9397M0*#
400	390	35 × 30	290	2.31	B43634C9397M0*#
400	470	25.4 × 55	220	2.80	B43634A9477M0*#
400	470	30 × 40	230	2.74	B43634B9477M0*#
400	470	35 × 35	240	2.64	B43634C9477M0*#
400	560	30 × 45	190	3.12	B43634A9567M0*#
400	560	35 × 35	210	2.85	B43634B9567M0*#
400	680	30 × 55	160	3.66	B43634A9687M0*#
400	680	35 × 40	170	3.26	B43634B9687M0*#
400	820	35 × 50	140	3.85	B43634A9827M0*#
400	1000	35 × 55	120	4.38	B43634A9108M0*#

Composition of ordering code
订货编码规则

* = Insulation feature 绝缘特征
  0 = PVC insulation PVC绝缘
  6 = PET insulation PET绝缘

# = Terminal style 焊针类型
  0 = Standard terminals (6.3 mm) 标准焊针 6.3 mm
  2 = 3 terminals (4.5 mm) 3焊针 4.5 mm
  7 = Short terminals (4.5 mm) 短焊针 4.5 mm

Technical data and ordering codes 技术参数与订货编码

V_R V DC	C_R 120 Hz 20 ºC µF	Case dimensions d × l mm	ESR_{typ} 120 Hz 20 °C mΩ	$I_{AC,R}$ 120 Hz 85 ºC A	Ordering code
450	82	22 × 25	1210	0.83	B43634A5826M0*#
450	100	22 × 30	990	0.95	B43634A5107M0*#
450	120	22 × 30	830	1.08	B43634A5127M0*#
450	120	25.4 × 25	840	1.07	B43634B5127M0*#
450	150	22 × 35	670	1.28	B43634A5157M0*#
450	150	25.4 × 30	670	1.26	B43634B5157M0*#
450	180	22 × 40	560	1.47	B43634A5187M0*#
450	180	25.4 × 35	560	1.44	B43634B5187M0*#
450	180	30 × 25	570	1.41	B43634C5187M0*#
450	220	22 × 50	450	1.73	B43634A5227M0*#
450	220	25.4 × 40	460	1.67	B43634B5227M0*#
450	220	30 × 30	470	1.63	B43634C5227M0*#
450	220	35 × 25	480	1.62	B43634D5227M0*#
450	270	25.4 × 45	370	1.95	B43634A5277M0*#
450	270	30 × 35	380	1.88	B43634B5277M0*#
450	270	35 × 30	390	1.99	B43634C5277M0*#
450	330	25.4 × 50	310	2.27	B43634A5337M0*#
450	330	30 × 40	310	2.31	B43634B5337M0*#
450	330	35 × 30	330	2.19	B43634C5337M0*#
450	390	30 × 45	270	2.61	B43634A5397M0*#
450	390	35 × 35	280	2.48	B43634B5397M0*#
450	470	30 × 50	220	2.99	B43634A5477M0*#
450	470	35 × 40	230	2.83	B43634B5477M0*#
450	560	30 × 55	190	3.39	B43634A5567M0*#
450	560	35 × 45	190	3.19	B43634B5567M0*#
450	680	35 × 50	160	3.63	B43634A5687M0*#

Composition of ordering code
订货编码规则

* = Insulation feature 绝缘特征
  0 = PVC insulation PVC绝缘
  6 = PET insulation PET绝缘

# = Terminal style 焊针类型
  0 = Standard terminals (6.3 mm) 标准焊针 6.3 mm
  2 = 3 terminals (4.5 mm) 3焊针 4.5 mm
  7 = Short terminals (4.5 mm) 短焊针 4.5 mm

Snap-in capacitors 焊片式电容器 B43634

Long useful life, ultra compact - 85 ºC 长寿命,超紧凑型 - 85 ºC

Below is an example of bar code label on package:
以下为包装箱上条形码标签示例：

Brand 品牌

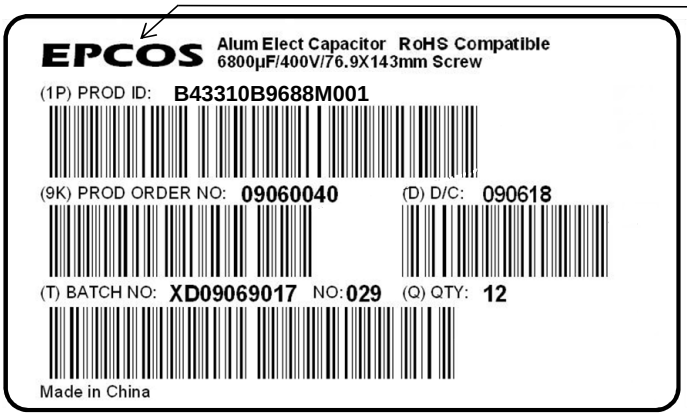

(1P)	Ordering code	订购代码
(9K)	Product order number	订单号
(D)	Date code (yywwdd)	日期代码（年月日）
(T)	Batch number	批号
(Q)	Quantity	数量

The three examples below shows how the capacitor sleeve are marked according to case height:
以下三个示例说明不同壳体高度电容器套管上的标签内容：

Case height 壳体高度			
25mm	EPCOS B43541-A9127-M 120µF (M) 400V- 40/085/56 LL MM.JJ X	Brand	品牌
		Part number (ordering code)	料号（订购代码）
		Rated capacitance, tolerance, rated voltage,	额定电容、容差、额定电压
		Climatic category, long life	气候分类，长寿命
		Month. Year and place of production	月. 年（生产日期）厦门（产地）
30~40mm	EPCOS LL B43541-A9337-M 330µF (M) 400V- 40/085/56 MM.JJ X	Brand， long life	品牌，长寿命
		Part number (ordering code)	料号（订购代码）
		Rated capacitance, tolerance, rated voltage, Climatic category	额定电容、容差、额定电压 气候分类
		Month. Year and place of production	月. 年（生产日期）厦门（产地）
>40mm	EPCOS LL B43541-A9567-M 560µF (M) 400V- 40/85/56 MM.JJ X	Brand， long life	品牌，长寿命
		Part number (ordering code)	料号（订购代码）
		Rated capacitance, tolerance	额定电容、容差
		Rated voltage, Climatic category	额定电压、气候分类
		Month. Year and place of production	月. 年（生产日期）厦门（产地）

Important notes

The following applies to all products named in this publication:

1. Some parts of this publication contain **statements about the suitability of our products for certain areas of application**. These statements are based on our knowledge of typical requirements that are often placed on our products in the areas of application concerned. We nevertheless expressly point out **that such statements cannot be regarded as binding statements about the suitability of our products for a particular customer application**. As a rule, EPCOS is either unfamiliar with individual customer applications or less familiar with them than the customers themselves. For these reasons, it is always ultimately incumbent on the customer to check and decide whether an EPCOS product with the properties described in the product specification is suitable for use in a particular customer application.

2. We also point out that **in individual cases, a malfunction of electronic components or failure before the end of their usual service life cannot be completely ruled out in the current state of the art, even if they are operated as specified**. In customer applications requiring a very high level of operational safety and especially in customer applications in which the malfunction or failure of an electronic component could endanger human life or health (e.g. in accident prevention or life-saving systems), it must therefore be ensured by means of suitable design of the customer application or other action taken by the customer (e.g. installation of protective circuitry or redundancy) that no injury or damage is sustained by third parties in the event of malfunction or failure of an electronic component.

3. **The warnings, cautions and product-specific notes must be observed.**

4. In order to satisfy certain technical requirements, **some of the products described in this publication may contain substances subject to restrictions in certain jurisdictions (e.g. because they are classed as hazardous)**. Useful information on this will be found in our Material Data Sheets on the Internet (www.epcos.com/material). Should you have any more detailed questions, please contact our sales offices.

5. We constantly strive to improve our products. Consequently, **the products described in this publication may change from time to time**. The same is true of the corresponding product specifications. Please check therefore to what extent product descriptions and specifications contained in this publication are still applicable before or when you place an order. We also **reserve the right to discontinue production and delivery of products**. Consequently, we cannot guarantee that all products named in this publication will always be available. The aforementioned does not apply in the case of individual agreements deviating from the foregoing for customer-specific products.

6. Unless otherwise agreed in individual contracts, **all orders are subject to the current version of the "General Terms of Delivery for Products and Services in the Electrical Industry" published by the German Electrical and Electronics Industry Association (ZVEI)**.

7. **Our manufacturing sites serving the automotive business apply the IATF 16949 standard**. The IATF certifications confirm our compliance with requirements regarding the quality management system in the automotive industry. Referring to customer requirements and customer specific requirements ("CSR") TDK always has and will continue to have the policy of respecting individual agreements. Even if IATF 16949 may appear to support the acceptance of unilateral requirements, we hereby like to emphasize that **only requirements mutually agreed upon can and will be implemented in our Quality Management System**. For clarification purposes we like to point out that obligations from IATF 16949 shall only become legally binding if individually agreed upon.

8. The trade names EPCOS, CeraCharge, CeraDiode, CeraLink, CeraPad, CeraPlas, CSMP, CTVS, DeltaCap, DigiSiMic, ExoCore, FilterCap, FormFit, LeaXield, MiniBlue, MiniCell, MKD, MKK, MotorCap, PCC, PhaseCap, PhaseCube, PhaseMod, PhiCap, PowerHap, PQSine, PQvar, SIFERRIT, SIFI, SIKOREL, SilverCap, SIMDAD, SiMic, SIMID, SineFormer, SIOV, ThermoFuse, WindCap are **trademarks registered or pending** in Europe and in other countries. Further information will be found on the Internet at www.epcos.com/trademarks.